2.4G RF RGB+W LED FLOOD LIGHT (30W)

- Soft start,no power peak
- Power off memory
- Easy Installation
- RF 2.4GHz,remote range nearly 30m
- Remote control through internet ,Compatible with wifi bridge
- Vivid colors changing，9 automatic changing programs
- Two years warranty,CE,RoHS

Waterproof IP65

Toughened glass cover

High quality parts

FEATURES:

2.4G RF RGBW LED Flood light with 4-zone remote control

1 Power: 30W RGB+10W white 4500K EPILEDS
2 Remote range: 30 meters
3 Input voltage: AC100-240V **Mean Well driver**
4 material: Aluminum,toughened glass
5 LED color: RGBW
6 Working temp: -20~60 degrees
7 Life span: 50.000h
8 package: 24.8x19.4x6.8cm
9 Net weight: 1000g
10 Gross weight: 1060g
11 Compatible with wifi bridge
12 Warm white 900lm Red 700-800lm Green 600-700lm Blue 200-250lm.

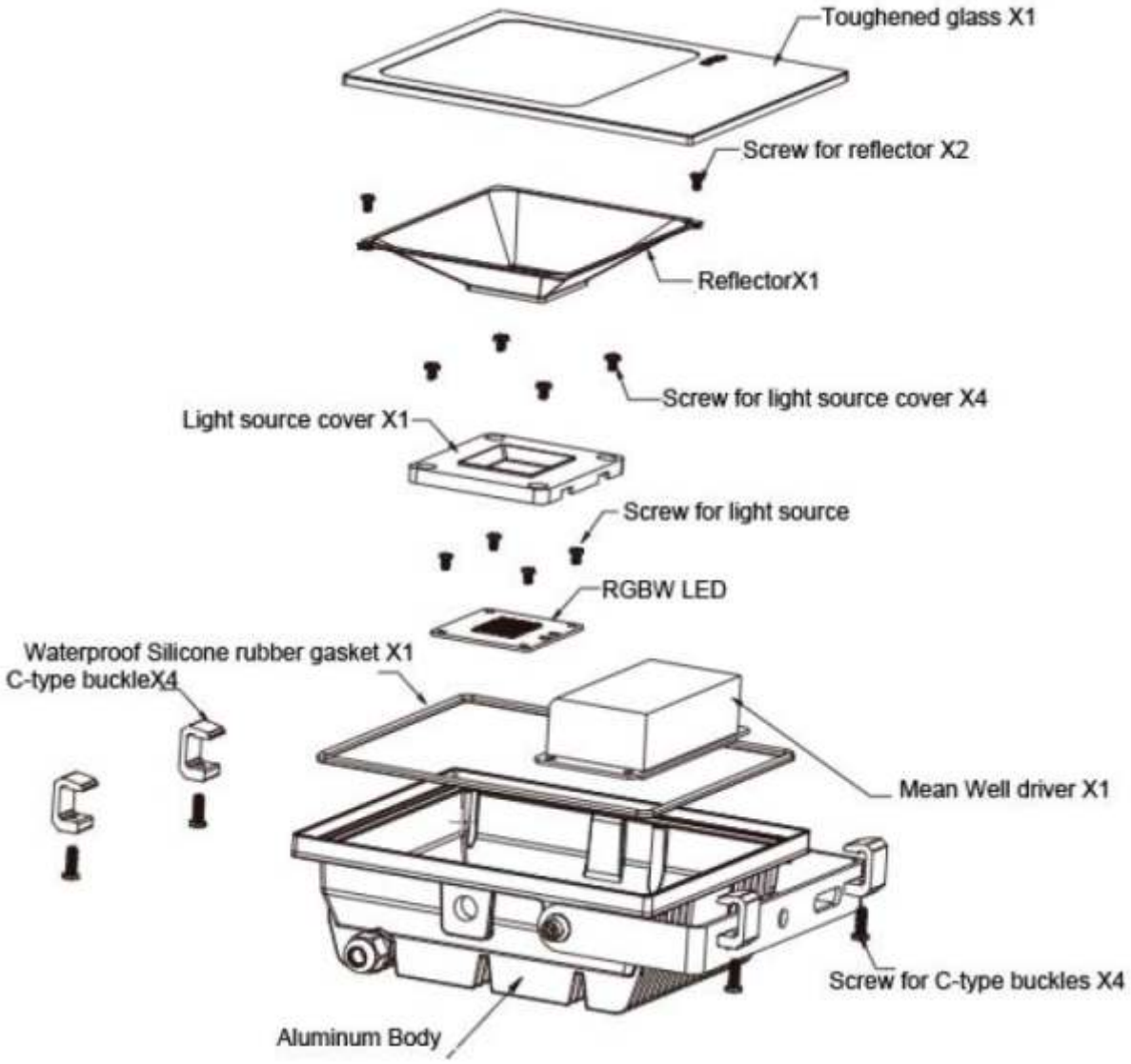

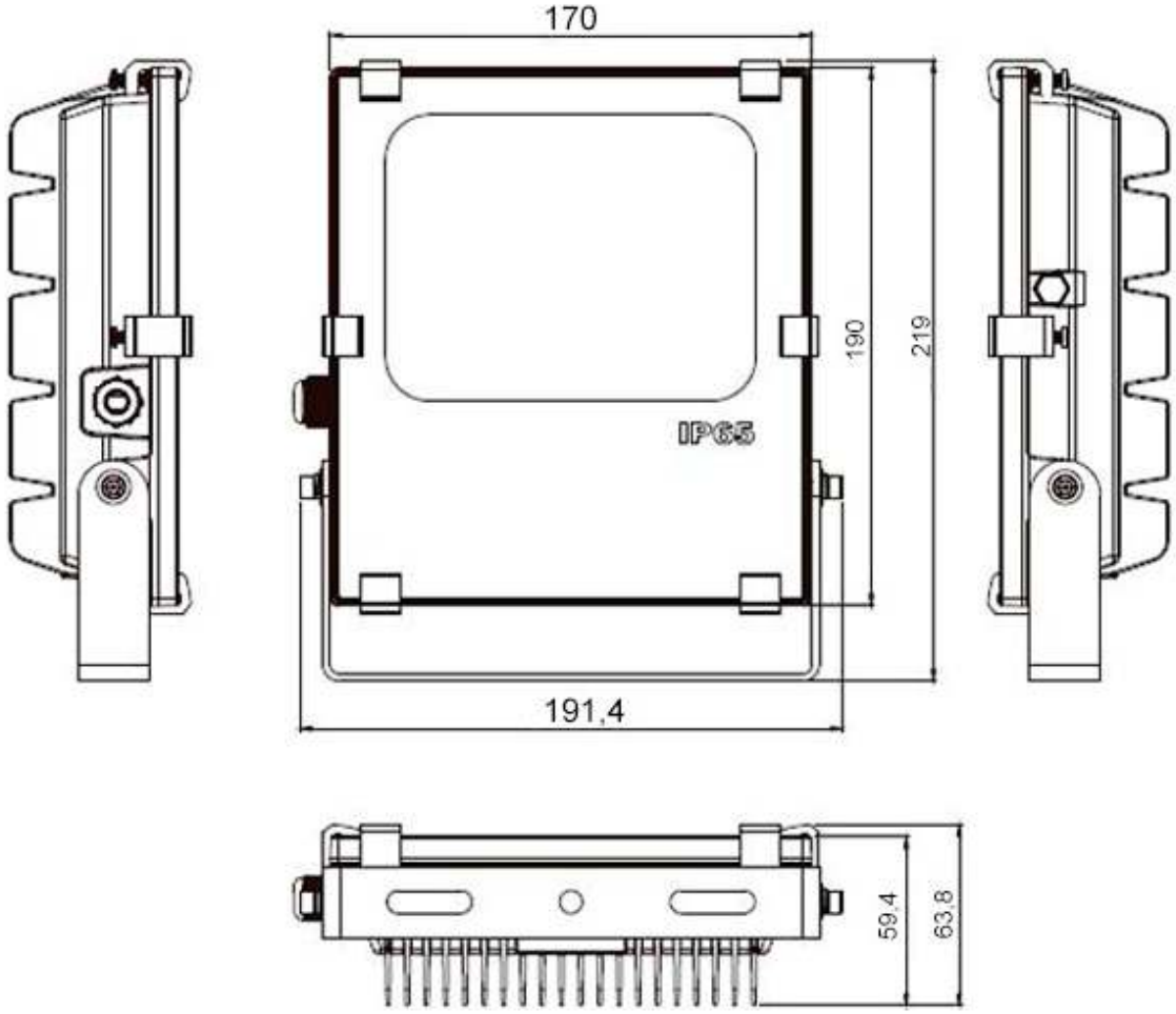

Package:
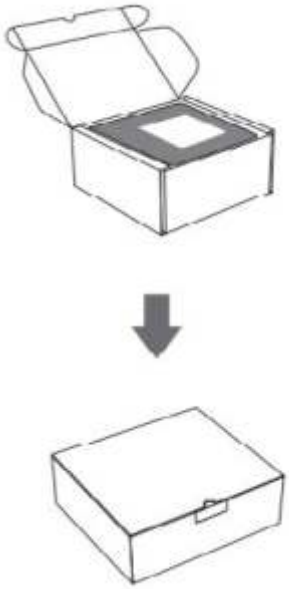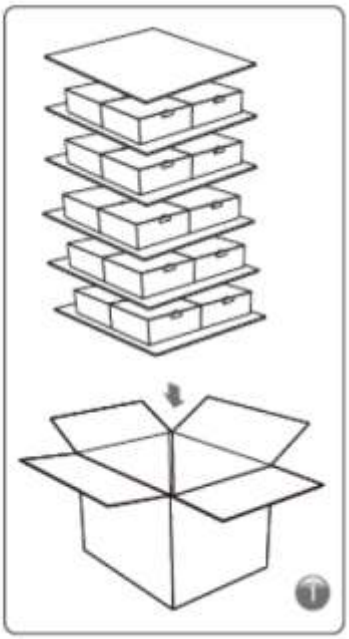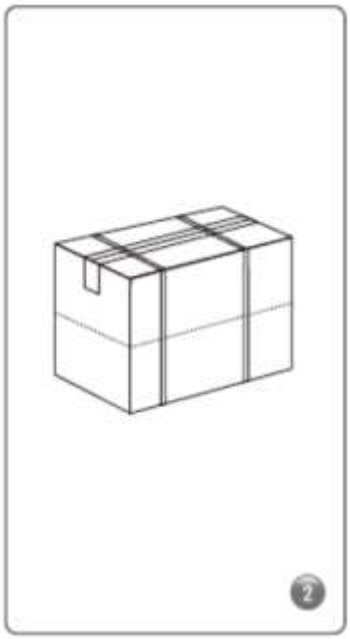
Inner box (24.8x19.4x6.8cm) 20pcs a carton carton:51X40.5X38cm